IMPORTANT SAFEGUARDS

When using your iron, basic safety precautions should always be observed, including the following:

- Please read all instructions.
- To protect against a risk of electric shock, do not immerse the iron in water or other liquids.
- The iron should always be turned to OFF before plugging or unplugging from outlet. Never yank cord to disconnect from outlet; instead, grasp plug and pull to disconnect.
- Do not allow cord to touch hot surfaces. Let iron cool completely before changing sole plate or putting away.
- Loop cord loosely around iron handle when storing.
- Do not operate iron with a damaged cord or if the iron has been dropped or damaged. To avoid the risk of electric shock, do not disassemble the iron. Take it to an authorized dealer or send it back to us for examination and repair. Incorrect reassembly can cause a risk of electric shock.
- Close supervision is necessary for any appliance being used near children. Do not leave iron unattended.
- Burns can occur from touching hot metal parts.
- This product is intended for use with carpet seaming tapes ONLY.

Special instructions:

- This is an 800-watt appliance. To avoid a circuit overload, do not operate another high wattage appliance on the same circuit.
- This iron has a three-prong, grounded plug. It should be plugged into three-hole outlets. If an adapter is used to accommodate a two-prong outlet, adapter wire must be attached to a known ground. NEVER remove ground terminal from a three-prong plug.
- If an extension cord is absolutely necessary, a 10-ampere cord should be used. Cords rated for less amperage may overheat, causing slow heat-up the iron. Care should be taken to arrange the cord so that it cannot be pulled on or tripped over.
- DO NOT IMMERSE IN WATER!

SAVE THESE INSTRUCTIONS

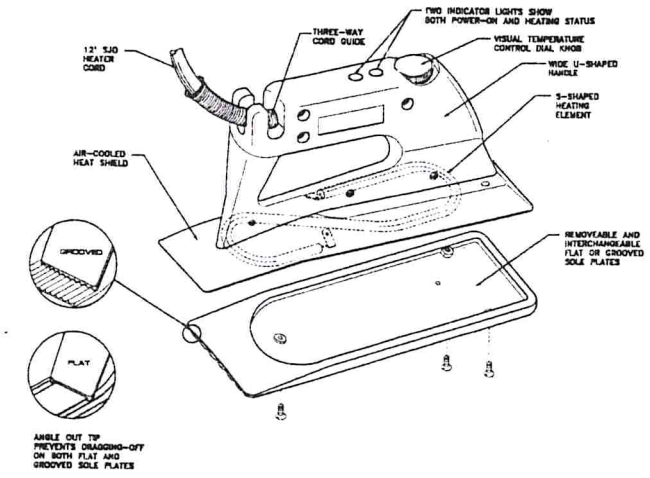

Features:

Heating Element: Uses an "S"-shaped heating element, creating more uniform heat throughout the sole plate.

Air-cooled Heat Shield: At maximum heat setting, the heat shield stays remarkably cool, at only 220° F. With this temperature, it is still hot enough to preheat the carpet's backing to accept the hot melt adhesive.

Dual Indicator Lights: Situated on top of the handle, the lights are easy to read and show both "power-on" and "heating status".

> **Power-On Light:** Green indicator light, glows when the iron is plugged into an electric outlet and is in use. If the Temperature Dial Knob is turned Off, the light will continue to glow as long as the iron is plugged in. (Note: If the Thermo-Cutoff Fuse (P/N 1920-P) is burned-out, this green light will be OFF).
>
> **Heating Status Light:** Red indicator light, which glows during the heat-up period, and then turns-off when the maximum temperature is reached. While operating, the light will continue going on and off whenever the iron is reheating itself.

Angle-Out Tip: Both Flat and Grooved Sole Plates have an angle-out tip at the back, this feature will prevent "dragging-off" the hot melt adhesive, especially in doorway situations where the iron is removed by angling it up and out.

Removable, Interchangeable Sole Plate: With this feature, you only need to carry one iron for all job conditions. Changing a sole plate will take only a minute.

12' Power Cord: The cord is long enough for most average rooms without using an extension cord.

Three-way cord guide: Keeps the cord out of user's way.

Temperature Dial Knob: Situated on top of the handle, it is easy to read, there are four temperature settings, ranging from 220°F to 420°F.

Table Of Settings:

Position	**#1 = 220°F Max.**
	#2 = 290°F
	#3 = 360°F
	#4 = 420°F

Using the iron:

- Set the temperature dial knob to its highest setting (#4). Once the iron has heated, adjust it to a safe temperature for the kind of carpet and abient temperature where you're installing. Be careful not to overheat carpets with synthetic backings or yarns, as shrinking and discoloration may result. If iron is running too cool, a weak seam may result. A test seam is often a good idea.
- When proper temperature has been selected, place iron between carpet edges, and on top the seaming tape. When the adhesive is thoroughly melted, move the iron and press the carpet's backing into the adhesive.
- Operating speed varies, depending on carpet construction and ambient temperature. At maximum temperature, the iron should seam at 3 to 4 feet per minute.
- To change a sole plate, unplug, and loosen three screws underneath sole plate. Replace with the desired sole plate and tighten screws firmly before use. (Note: if sole plates' screws are covered with old adhesive, simply plug-in iron to setting #1 for a few minutes. When adhesive melts, unplug the iron and remove the screws).

Iron Maintenance:

In time, your iron sole plate may develop a carbon build-up of old adhesive. After each seam is completed, clean the sole plate with the iron cleaner comb provided or with a carpet scrap and turn the iron off.